Model	Other model names	Date	Revision	Revision date
FX Royale 400 (R4) – 500 (R5)		2018-06-21	EN.21.02	2021-05-12

A

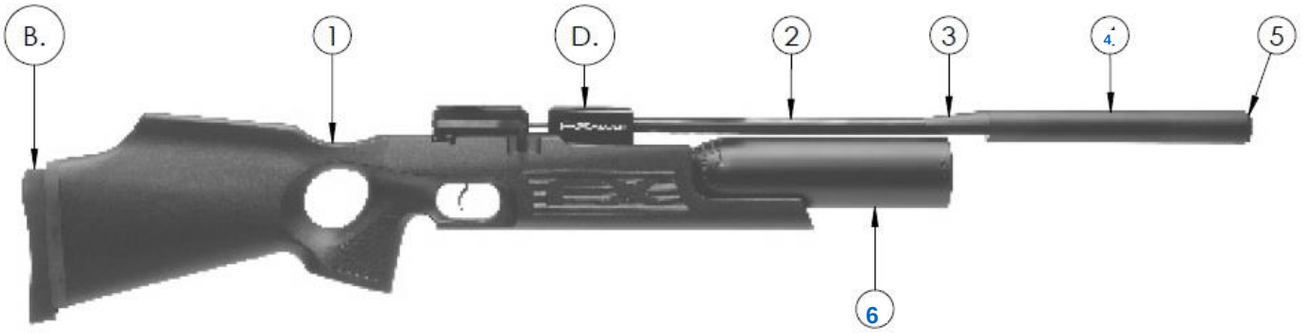

B

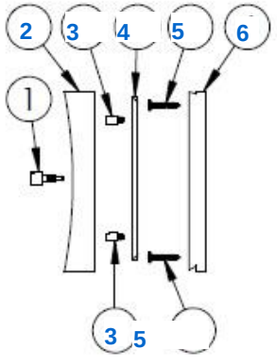

C

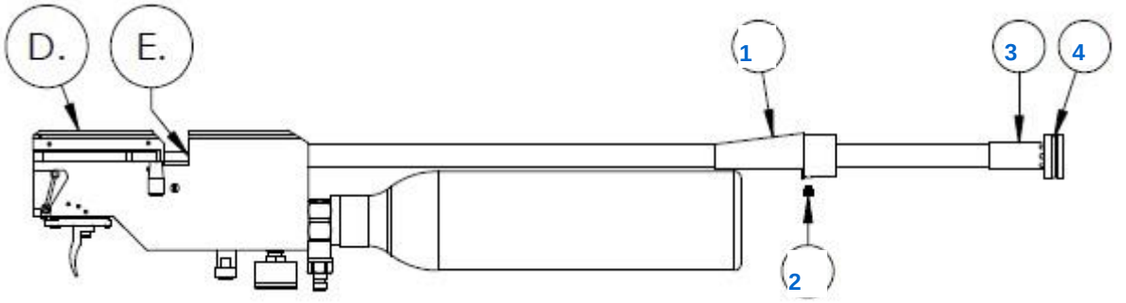

Model	Other model names	Date	Revision	Revision date
FX Royale 400 (R4) – 500 (R5)		2018-06-21	EN.21.02	2021-05-12

D
F
G
H
I

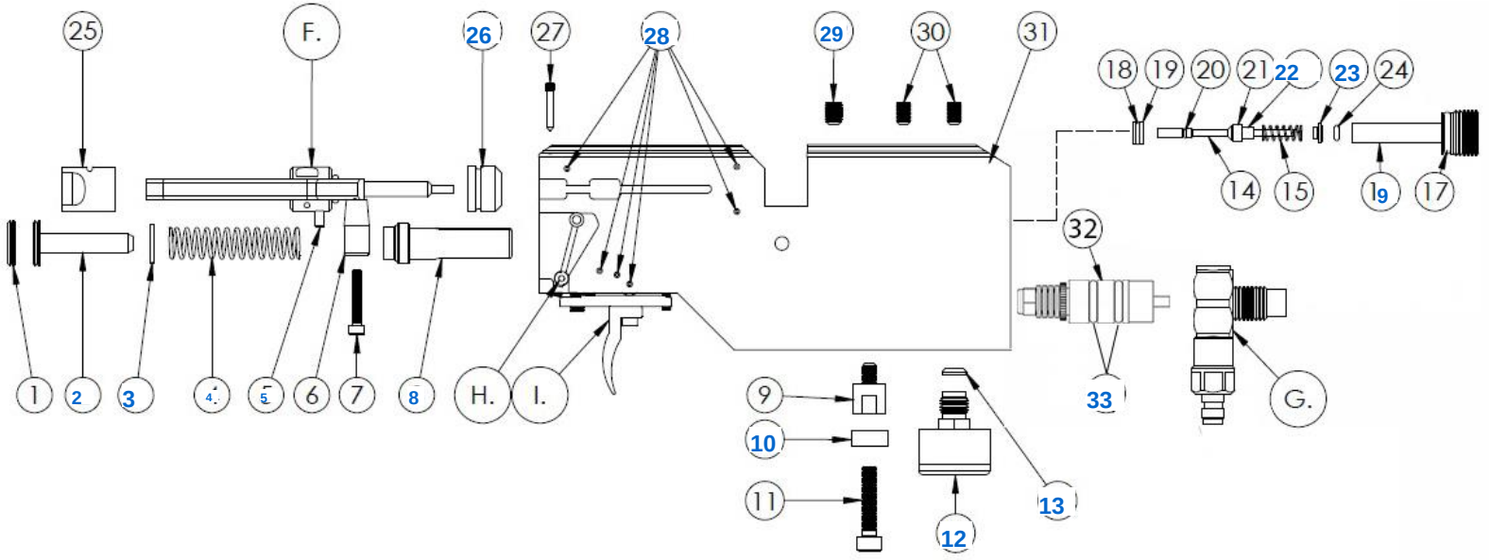

E

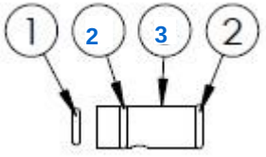

G

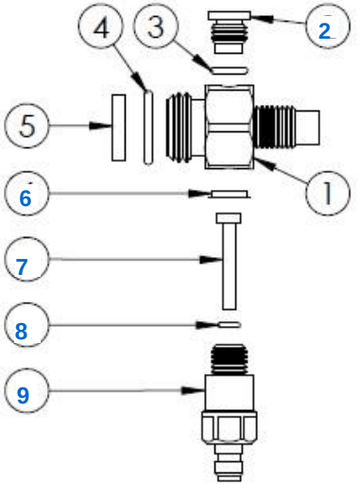

H

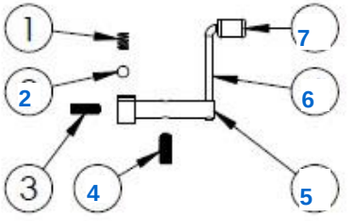

F

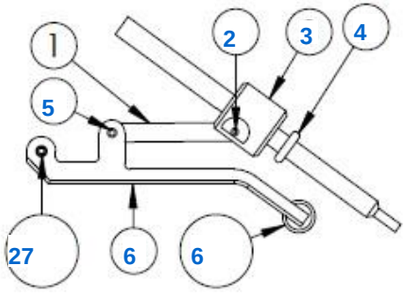

I

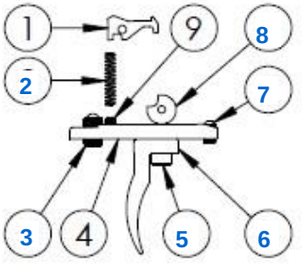

Royale

Model	Website	Production date	Revision	Rectification date
Royale	https://europeairguns.com/	2018-06-21	EN.21.02	2026-09-26

Model	Other model names	Date	Revision	Revision date
FX Royale 400 (R4) – 500 (R5)		2018-06-21	EN.21.02	2021-05-12

Description: X = Not shown in drawing / HP = High-power / LP = Low-power / ST = Smoothtwist / LW = Lothar Walther / W =Walnut / S = Synthetic

NO	ART. NO	DESCRIPTION	NO	ART. NO	DESCRIPTION	NO	ART. NO	DESCRIPTION
A1 – S	19018	Stock Royale Synthetic	D11 - W	14500	Socket head cap screw M5x16	E2	5112	O-ring 5,28x1,78 NBR70
A1 – W	19219	Stock Royale Walnut: Std	D11 - S	4509	Socket head cap screw M5x20	E3 - 4,5	2057	Barrel brass inlet .177
A2 - 4,5	12030	Barrel 4,5-14-485	D12	11505	Pressure gauge 25mm 1/8"	E3 - 5,5	2056	Barrel Inlet .22
A2 - 5,5	12006	Barrel 5,5-14-485	D13	5005	Plastic Washer 2mm 1/8"	E3 - 6,35 <16J	19104	Barrel inlet .25
A2 - 6,35	19106	Barrel 6,35-14-600	D14 – no regulator	7015	Valve pin V7 complete	E3 – 6,35 >16J	19118	Barrel inlet .25 HP
A3	19032	Shroud Cone	D14 – HP .22, reg.	7019	Valve pin SHP - Complete	F1	19021	Side lever linkage
A4 - R4	19023	Shroud 216mm	D14 – HP .25, reg.	7020	Valve pin long SHP - Complete	F2	19042	Cylindrical pin 2mx6x8
A4 - R5	19099	Shroud 345mm R5	D15	2525	Spring 0,6x4x15	F3 – 4,5	19011	Pellet probe 4,5
A5 - 4,5	17023	Muzzle .177	D16 LP	19009	Guide M16	F3 – 5,5	19010	Pellet probe 5,5 v7
A5 - 5,5	17000	Muzzle .22	D16 HP	19009HP	Guide M16	F3 – 6,35	19192	Pellet probe 6,35 v 7,8
A5 - 6,35	19112	Muzzle .25	D17	5105	O-ring 9,3x2,4 NBR90	F4	1504	O-ring 4,42x2,62 NBR70
A6 - R4	0219	Bottle 400 complete	D18 – no regulator	7044	Valve seat Complete	F5	19026	Cylindrical pin 2,5m6x6
A6 - R5	5536	Tube/ Bottle 500cc Complete	D18 – with regul.	19060	Valve seat SHP Complete	F6	19020	Sidelever
B1-6	16051	Adjustable recoil pad	D19	2529	O-ring 4,3x1,5 NBR70	G1	19008	Tube Receiver M20
C1	19032	Shroud Cone	D20	2528	O-ring 1,5x1 NBR70	G2	19035	Plug 1/8”
C2	19114	Grub screw M5x6 flat	D21	2040	Plastic Washer	G3	4528	O-ring 7,66x1,78NBR70
C3 - 4,5	19028	Shroud compensator 4,5-5,5	D22	2041	Holder Valve Seal	G4	19088	O-ring 15,88x2,62 NBR90
C3 - 5,5	19028	Shroud compensator 4,5-5,5	D23 HP	19038	Spring seat v7	G5	19036	Plastic Washer 18,9x15x3 Tube Receiver
C3 - 6,35	19065	Shroud compensator 6,35	D24 HP	5111	O-ring 2,5x1,5 NBR90	G6	19030	Plastic Washer 12x9,8x2,3 Early Royale
C4	19098	O-ring 18,0x4,0 NBR 70	D25	19029	Rear pellet probe guide	G7	19005	Inlet valve rod - Blue
D1 - Only UK	16043	Anti Tamper	D26 – 4,5	19013	Black plastic bushing	G8	5107	O-ring 2,9x1,78 PUR90
D2 - 4,5	11030	Hammerspring Adjuster	D26 - 5,5	19012	Black plastic bushing 5,5	G9	19062	Quick Connector male
D2 - 5,5	11030	Hammerspring Adjuster	D26 - 6,35	19101	Black plastic bushing 6,35	H1	11503	Spring 0,5x2,5x4,4
D2 - 6,35	11030 > 10Joule	Hammerspring Adjuster	D27	19034	Screw M3 "special"	H2	4066	Steelball 3mm
D2 - 6,35	11541 16Joule >	Hammerspring Adjuster	D28	19040	Cylindrical pin 2m6x23,5	H3	11633	Grub Screw M2,5x8
D3	16026	Washer 6,7x14	D29	19086	Conical grub screw M6x8	H4	11508	Grub Screw M3x10
D4	11500	Hammerspring	D30	2534	Conical grub screw M5x6	H5	11027	Safety Pivot
D5	11509	Cylindrical pin 3h6x10	D31 – 4,5	19003-1R	Main Block Royale .177	H6	11625	Safety lever 27,5mm Cyclone, Cutlas, Ranch.
D6	19037	Side lever Handle v7	D31 – 5,5	19003-2R	Main Block Royale .22	H7	11200	Safety knob
D7	11060	Socket head cap screw M3x18	D31 – 6,35	19003-3R	Main Block Royale .25	I1	11031	Trigger Sear
D8 - R4	19039	Hammer V7	D32	-	See “Regulator pressure chart” schematic	I2	11504	Spring 0,32x3,2x14,4
D8 - R5	19039+11540	Hammer+Weight	D33	5109	O-ring 11,6 x 2,4 NBR 70 (already included in regulator mounted)	I3	11062	Adj screw second stage, soft
D9	19015	Stock Attachment M5	E1 – 4,5	2529	O-ring 4,3x1,5 NBR70	I4	11524	Trigger base
D9 - X	5112	O-ring 5,28x1,78 NBR70	E1 – 5,5	5108	O-ring 5,28x1,78 PUR70	I5	2527	Socket head cap screw M3x10
D10	16044	Stock Spacer	E1 – 6,35	4526	O-ring 6,4x1,3 NBR 70	I6	2020	Trigger blade
						I7+I9	2500	Grub Screw M3x6
						I8	11525	Trigger Wheel