Revolution

Model	Website	Production date	Revision	Rectification date
Revolution	https://europeairguns.com/	2018-06-20	EN.21.02	2026-09-26

Model	Other model names	Date	Revision	Revision date
FX Revolution		2018-06-20	EN.21.02	2021-05-12

A

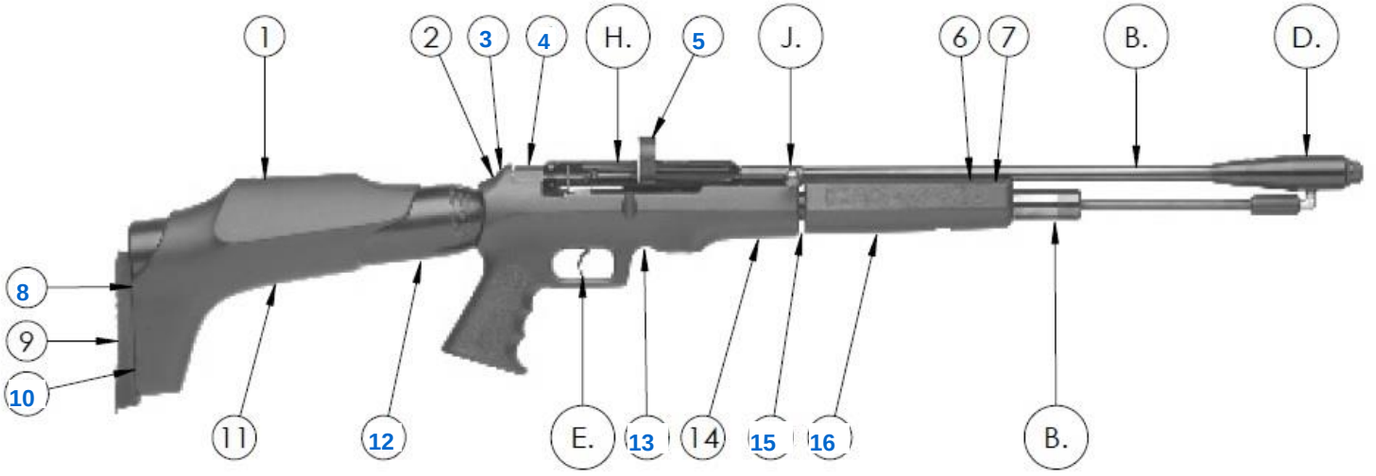

B

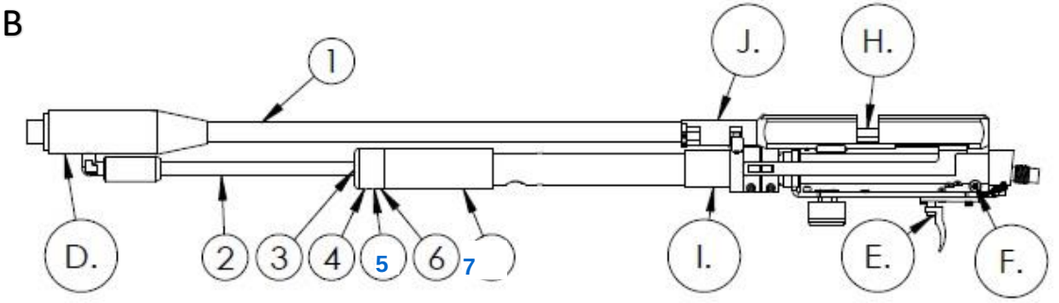

C

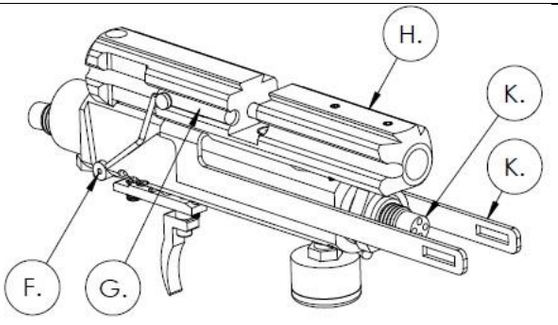

Revolution

Model	Website	Production date	Revision	Rectification date
Revolution	https://europeairguns.com/	2018-06-20	EN.21.02	2026-09-26

Model	Other model names	Date	Revision	Revision date
FX Revolution		2018-06-20	EN.21.02	2021-05-12

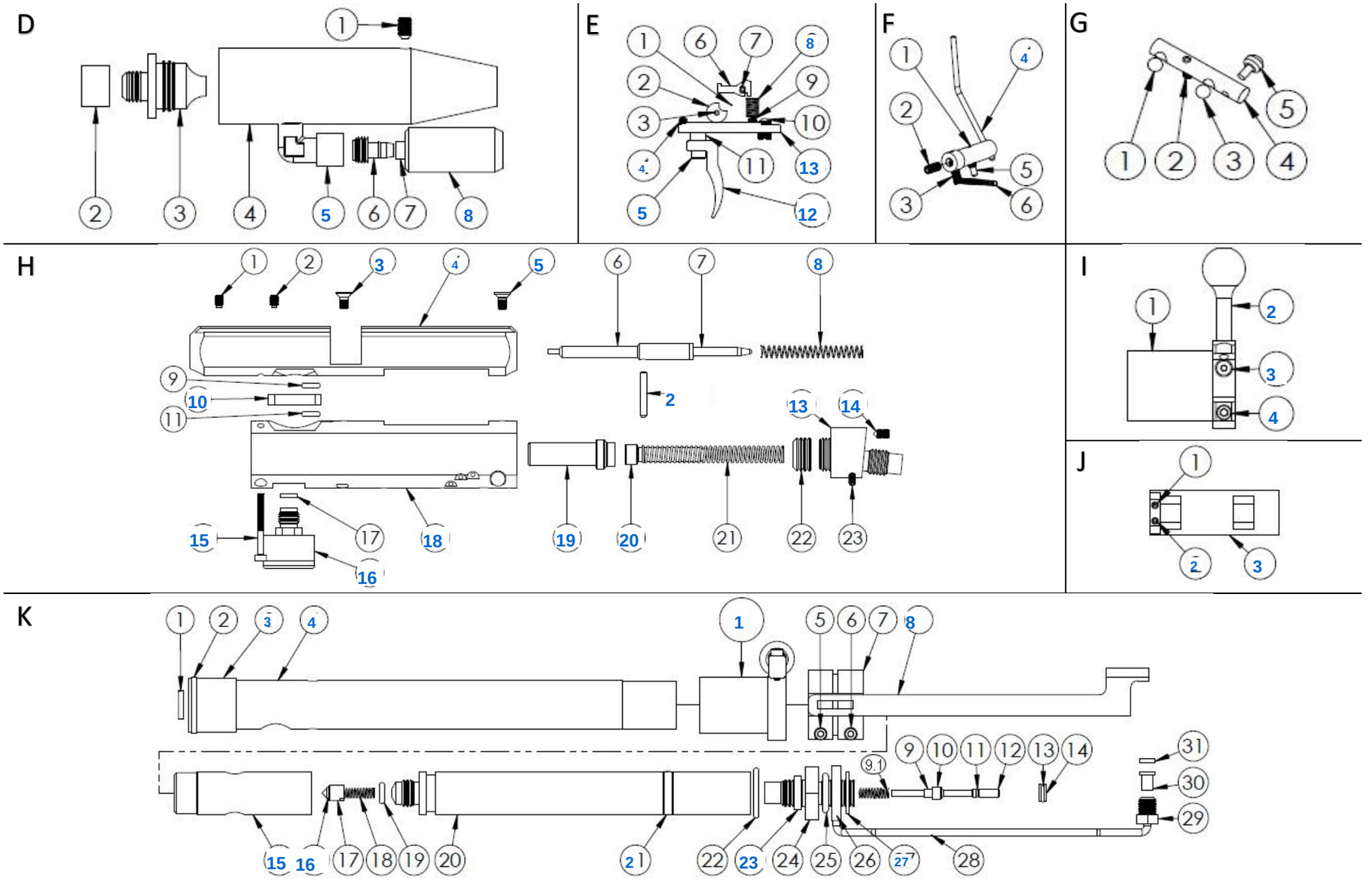

Revolution

Model	Website	Production date	Revision	Rectification date
Revolution	https://europeairguns.com/	2018-06-20	EN.21.02	2026-09-26

Model	Other model names	Date	Revision	Revision date
FX Revolution		2018-06-20	EN.21.02	2021-05-12

NO	ART. NO	DESCRIPTION	NO	ART. NO	DESCRIPTION	NO	ART. NO	DESCRIPTION
A1	16040	Grub Screw M8x20	E3	11502	Cylindrical pin 2h6x20	> H10	11503	Spring 0,5x2,5x4,4
A2	11532	Grub Screw M8x10	E4	2500	Grubscrew M3x6	H11	11623	O-ring 4,42x2,62 NBR90
A3	11512	Brasscap M8	E5	2527	Socket head cap screw M3x10	H12	11514	Cylindrical pin 3m6x22
A4	14012	Plastic Magazine pin slider	E6	17020	Trigger Sear	H13	14008	Air Bottle Connector
A5 - 4,5	1704	Magazine .177 16shot	E7	11502	Cylindrical pin 2h6x20	H14	12033	Conical grub screw M4x8
A5 - 5,5	1701	Magazine .22 12 shot	E8	17046	Spring 0,5x3,5x15	H15 x2	11506	Socket head cap screw M3x30
A6-7	2503	Cup point grub screw M5x8	E9	2500	Grubscrew M3x6	H16	11505	Pressure gauge 25mm 1/8"
A8	5201	Socket head cap screw M4x16	E10	11015	Second stage trigger screw M5	H17	5005	Plastic Washer 2mm 1/8"
A9	11526	Recoilpad v1,v2	E11	2063	Trigger spacer	H18	17016	Main Body
A10	5201	Socket head cap screw M4x16	E12	2020	Trigger blade	H19	18047	Hammer Semi-Auto*
A11	14010	Stock Gladiator rear	E13	17017	Trigger base v4.6	H20	17003	Hammer weight
A12	5536	Tube/ Bottle 500cc Complete	F1	17004	Resetaxel	H21	16024	Hammer spring v3,v4
A13	14500	Socket head cap screw M5x16	F2	2637 and 11633	G Screw M4x6 and M2,5x8	H22	17006	Spring guide
A14	14011	Stock v2 Gladiator grip	F3	11508	Grub Screw M3x10	H23	11508	Grub Screw M3x10
A15	11502	Cylindrical pin 2h6x20	F4	17060	Resetpin Revolution	I1	17010	Cockingbolt mount P1/2
A16	17021	Stock Front Grip	F5	17040	Reset screw M3	I1	17005	Cockingbolt mount P2/2
B1 - 4,5	12030	Barrel 4,5-14-485	F6	17018	Spring 0,2x3x15	I2	4018	Cocking bolt
B1 - 5,5	12006	Barrel 5,5-14-485	G1	5110	Rubberball 4,75 NBR70	I3	2504	Countersunk screw M3x6
B2	17019	Transfer tube	G2	11508	Grub Screw M3x10	I4	11546	Socket head cap screw M3x14
B3	2503	Cup point grub screw M5x8	G3	5110	Rubberball 4,75 NBR70	J1-2	2500	Grubscrew M3x6
B4-5	2637	Grub screw M4x6 flat	G4	17011	Safetyslider	J3	17013	Cocking bolt catcher
B6	17008	Reloading chamber	G5	17012	Safetyhandle	K1	17001	Piston Seal 12,7
B7	17042	Reloading chamber tube	H1-2	2637	Grubscrew M4x6	K2	17002	Piston Seal 25,4
D1	2534	Grub screw M5x6	H3	11511	Countersunk screw M4x8 (Torx)	K3	17007	Piston
D2 - 5,5	13010	Muzzle thread cover 16mm	H4 - 4,5	17015-1R	Main Block Revolution .177	K4	14007	Tube 22x1 v4.2
D3 - 4,5	17023	Muzzle .177	H4 - 5,5	17015-2R	Main Block Revolution .22	K5-6	11546	SH Screw M3x14
D3 - 5,5	17038	Muzzle .22 -1/2 UNF	H5	11511	Countersunk screw M4x8 (Torx)	K7	14009	Fork Clamp
D4	17009	Expansion Chamber	H6 - 4,5	17059	Pellet probe .177 v4	K8	14006	Fork
D5	4006	L Connection	H6 - 5,5	17014	Pelletprobe 5,5	K9-12	7035	**Valve pin V2 complete**
D6	17039	Hose connection	H7	11042	Spring guide M5	K9	2040	Plastic Washer
D7	17044	Rubber hose L35	H8	17052	Spring	K9.1	11627	Spring 0,6x4x20
D8	17037	Hose Cover	H9	11623	O-ring 4,42x2,62 NBR90	K10	2041	Holder Valve Seal
E1		Piano wire v4	H10	11642	Poweradjuster	K11	2528	O-ring 1,5x1 NBR70
E2	11525	Trigger Wheel	> H10	4066	Steelball	K13-14	7044	**Valve seat Complete**

Revolution

Model	Website	Production date	Revision	Rectification date
Revolution	https://europeairguns.com/	2018-06-20	EN.21.02	2026-09-26

Model	Other model names	Date	Revision	Revision date
FX Revolution		2018-06-20	EN.21.02	2021-05-12

K14	2529	O-ring 4,3x1,5 NBR 70	K19	11623	O-ring 4,42x2,62 NBR90	K25	17047	O-ring 11,9x2,62 NBR70
K15	14002	Inlet valve housing	K20	14001	Air reservoir	K26.28-30	14022	**Transferpipe assembly**
K16-17	7045	**Backvalve Complete**	K21	12004	Slider ring	K27	11507	Rubber/Steel Washer
K16	5111	O-ring 2,5x1,5 NBR90	K22	5103	O-ring 18x2,5	K31	14015	Plastic seal
K17	12011	Inlet valve	K23	17041	Plastic Washer 15x3 Revolution			
K18	5204	Spring 0,5x3x15	K24	14005	Air Cylinder Connector			